Submersible Borehole Pump

Original Instruction Manual

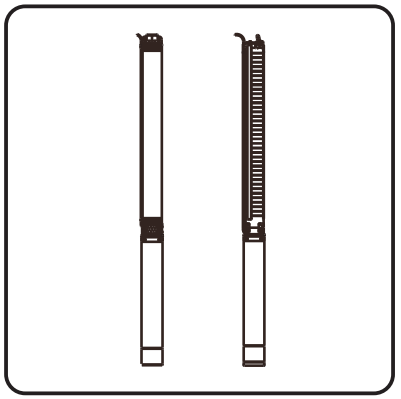

XR(m)/XRS(m)

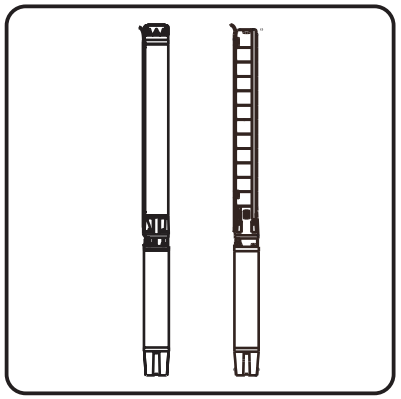

6XRP/6XRS

LEO GROUP PUMP CO.,LTD
LEO GROUP PUMP (ZHEJIANG) CO.,LTD
No.1,3rd Street, East Industry Center, Wenling, Zhejiang, 317511,P.R.China,
www.leopump.com export@leopump.com
+86-576-89986360 +86-576-89989898

LEO reserves all the right of products modification without prior notification

www.leopump.com

Always disconnect the appliance from the supply before assembling, disassembling or cleaning.
Appliances can be used by persons with reduced physical, sensory or mental capabilities or lack of experience and knowledge if they have been given supervision or instruction concerning use of the appliance in a safe way and if they understand the hazards involved.
Children shall not play with the appliance.
Pumps without indication that they are protected against the effect of freezing shall not be left outside during freezing weather conditions

Attention!
If the appliance or the supply cord is damaged, it must be repaired by manufacturer, its service agent or qualified person.



Meaning of crossed –out wheeled dustbin:

Do not dispose of electrical appliances as unsorted municipal waste, use separate collection facilities.

Contact you local government for information regarding the collection systems available.

4. Failure reasons and troubleshooting method

Fault phenomenon	Reasons	Solutions
Motor: out of operation	1. Too much low voltage leads to failed start-up; 2. Stuck impeller or stator and rotor; 3. Three-phase electric pump: power phase shortage; 4. The welding lines of capacitor and protector fall off or to be burnt; 5. Burnt stator winding or open circuit.	1. Use a voltage regulator for further adjustment; 2. Check causes and then take the corresponding measures; 3. Take off the water inlet valve to clean stoppers of impellers as well as silt of sand-proof cover; 4. Find reasons for phase shortage and then take measures for normal three-phase power; 5. Re-weld falling wires or change damaged parts; 6. Send to maintenance unit to replace or repair windings.
No water or not enough water amount	1. Too much low voltage leads to not enough rotation or reduced water amount; 2. Too high lift that has exceeded electric pump's lift capacity; 3. Wrong impeller rotation; 4. Serious wear of impellers; 5. Open circuit of stator winding.	1. Adjust voltage; 2. Decrease lift or buy another electric pump according to practical situation; 3. Exchange position of two power lines; 4. Clean blocked sundries; 5. Change impeller or send it to maintenance unit; 6. Send it to maintenance unit for further repair.
Frequently worked protectors	1. Too much low voltage leads to increased current and serious motor heating; 2. Too much low lift leads to increased water drainage and serious motor overload; 3. Abnormal wear of rotors or parts; 4. The electric pump is exposed above water or operated in a dry environment; 5. Damaged sealing; water inflow of machine winding; 6. Serious bearing wear (too much big noise) and increased friction force.	1. Adjust voltage; 2. Use iron wire to narrow water outlet so as to reduce outflow; 3. Adjust or replace parts; 4. Reduce installation height; 5. Replace sealing element and dry the electric machine; 6. Replace bearing.

WIRING DIAGRAM

Single phase with capacitor connection demonstration

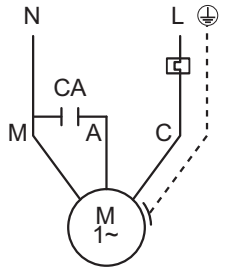

Single phase with built-in capacitor connection demonstration

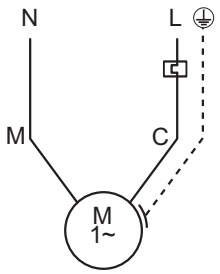

Three phase with three cable connection demonstration

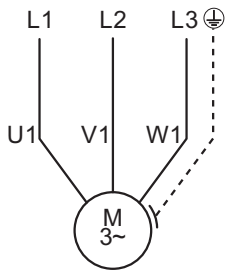

Three-Phase Motor Lead Identification

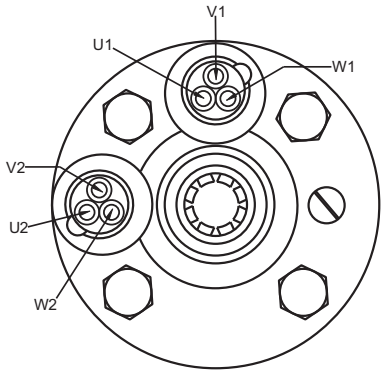

Three phase with six cable Y connection demonstration

● Connections for across-the-line starting, running and any reduced voltage starting except WYE-DELTA type starters.

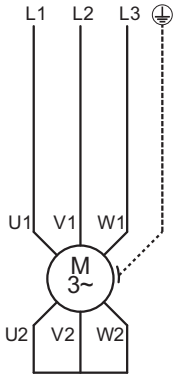

Three phase with six cable △ connection demonstration

● WYE-DELTA starters connect the motor as shown below during starting, then change to the running connection shown at the left.

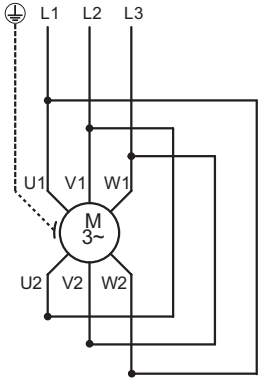

●The double voltage motor adopts the △ type connection method for 220V and the Y connection method for 400V. The two voltage connection methods can not be switched.

Thank you for buying our water pumps. Please read the operation manual carefully before using.

⚠ WARNING

- The reliable grounding must be conducted before using water pumps. The earth leakage protective device as well as overload or over-current protective device must be installed on water pumps.
  The electric pump is not allowed for dry running.
- The nearby water surface shall not be contacted withwater pumps during operation;
- In order to prevent electrical shock, the power source shallbe shut off during maintenance and cleaning.
-

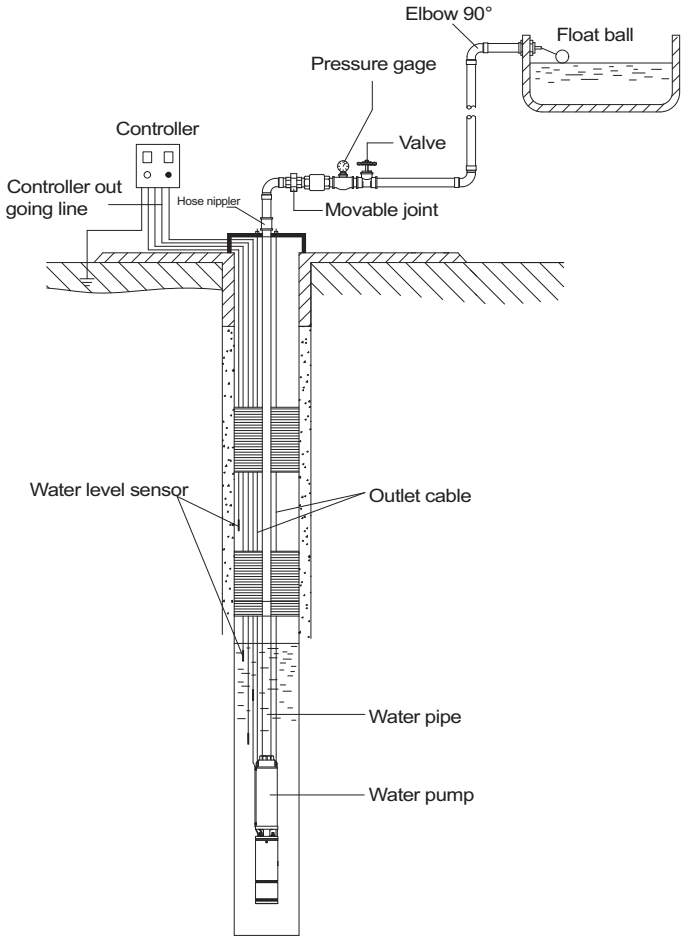

1. Introduction

The deep-well pump is a water lifting tool based on direct connection between electric machine and water pump, which is suitable to fetch underground water from deep wells or rivers, reservoirs and canals etc in some projects. Further, this product is mainly used for farmland irrigation as well as human and animal drinking water in plateau mountain areas.More importantly, the deep-well pump can be used for water supply and discharge in cities, factories, railways, mines and construction sites.

2. Use condition

2.1 Voltage fluctuating range shall be ±10% of rated values;

2.2 The electric machine's submerged depth shall not be more than 80m.

2.3 The water temperature shall not be higher than +35°C.

2.4 The PH value of water is between 6.5 and 8.5.

2.5 The solid contents in the water shall not be larger tihan 0.25% with the maximum diameter not over 2.3mm.

3. Installation use and notice

3.1 Please check whether the inner diameter conforms to the minimum diameter of water pumps before buying and installing. If iti s a new well, the air compressor or old water pump shall be used to clean sundries and soils. After that, please check whether the water quality and temperature conform to use conditions.The water pump can only be installedwith the water inside the well up to standard.

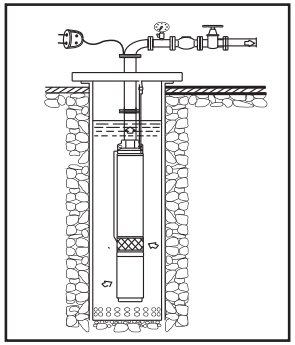

3.2 Please check damage that may be caused in the transportation and storage process after unpacking the pump. For example, whether the cable and plug etc are intact; various joints are not loosened without any leakage. If with any damage, please contact with professional personnel to repair or replace it.

3.3 During installation, please fix the electric pump and then install earth leakage protective device or over-hear or over-current protective device correctly The electric pump must be connected to ground reliably.

The tied ropes of hoisting electric pump must be firm and durable. The cable lines shall not be stretched but in a natural loose state.

3.10 The cables are not allowed for impact and crushing or used as lifting ropes. Further, do not pull the cables randomly during operation so as to avoidelectric shock caused by cable damage.

3.11 The depth of electric pump in the water shall not be over 80m but 3m above the bottom. Further,the electric pump shall not be sunk into soils .Meanwhile, the user shall prevent sundries to block nets or impellers, because it will lead to abnormal works.Please check the water level during works to avoid exposed or dry works,or else it will burn the electrical machine and other parts.

3.12 During usage, washing,swimming or animals are not allowed within working regions. The safety warning label "electric shock risk, no entry" shall be set up on the site to prevent accidents.

3.13 The oil-filled electrical machine has been equipped with appropriate food machine oil at the time of ex-factory. The users are not allowed to fill in any water or oil into the electrical machine (except for maintenance).

3.14 The oil-filled electrical machine is equipped with food machine oil that may be leaked during damage or breakdown.Under the use environments such as planting, cultivation or drinking water, food transportation and processing etc, the leaked food machine oil may cause certain damage to plants and cultured animals or pollute drinking water or food.The user shall evaluate the use environment as well as related consequence before selecting this product so as to confirm its proper use.If necessary, please invite some related professional personnel. If with food machine oil leakage, please stop usiing and deal with it properly.

3.15 The power source shall be cut off at the time of adjusting position on contacting with electric pumps in case of any accidents. The electric pump shall not be lifted away from water surface after shunting down power source so as to guarantee safety.

3.16 The electric pump belongs to specialized technology-based product. The unqualified repairman shall not conduct any random disassembly. The sealing and insulation testing must be conducted after laid-up and reassembly.

3.17 The maintenance shall be conducted on electric pumps after 3,000-year normal operation. Various easily damaged parts such as mechanical seal, bearing and impeller etc must be replaced. The air pressure test must be conducted on motor and oil chambers after laid-up or changing mechanical seal. The test pressure is 0.4 Mpa. There shall be no leakage within five minutes.

3.18 The pump shall not be sunk into water for long-term nonuse. Instead, the pump shall be put in the clear water for several minutes of operation so as to clean mud etc inside and outside the pump. Further, the anti-rust oil shall be coated o the pump that shall be put in a dry and ventilated place. The electric pump with rather long-term use shall be repainted or treated by anti-rust oil according to its surface corrosion status.

3.8.5 Wrap the cable that is wrapped with the waterproof adhesive tape with the electrical insulating tape.

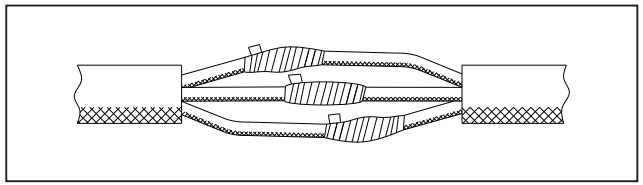

3.8.6 Wrap the cable that is wrapped with the electrical insulating tape with the waterproof adhesive tape. The waterproof adhesive tape should be 10mm longer than the electrical insulating tape at both ends. Before the wrapping, the water proof tape should be stretched out 1-fold its length and follow the normal use.

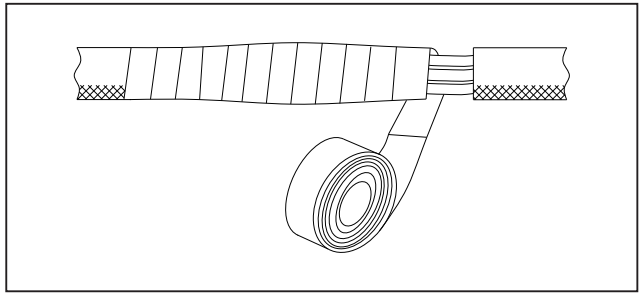

3.8.7 Immerge the junction of the cable into water for 12 hours. Test the insulation resistance of the cable with the 500V megohmmeter. The cold insulation resistance should be not less than 50 MΩ.

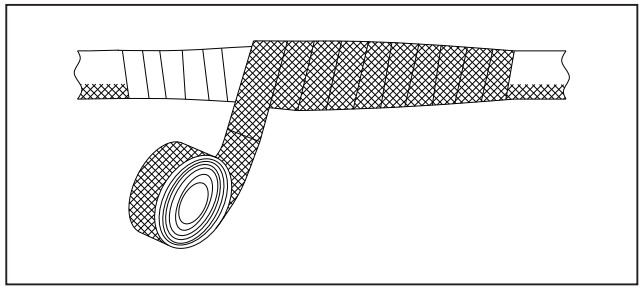

3.9 The delivery pipe shall be matched to the water outlet (the specification shall be selected based on performance parameter table). For example, the iron wire or clamp can be used to connect with soft delivery pipes; the screwed joint can be used for steel delivery pipes for further reliable connection. Further , the threading ropes are used at the handle in case of lifting in the water.

3.4 When the water pump reaches a certen length, the motor and the pump body need to be packed separately.
- In case of a separate packing, first remove the filter screen and cable protection plate from the pump body, then place the pump body on the motor to make the spindle head of the rotor smoothly slide into the coupling, manually rotate the coupling to check if it can run normally, then screw up the connecting bolt(Figure 2),and finally install the filter screen and cable protection plate(Figure 3).

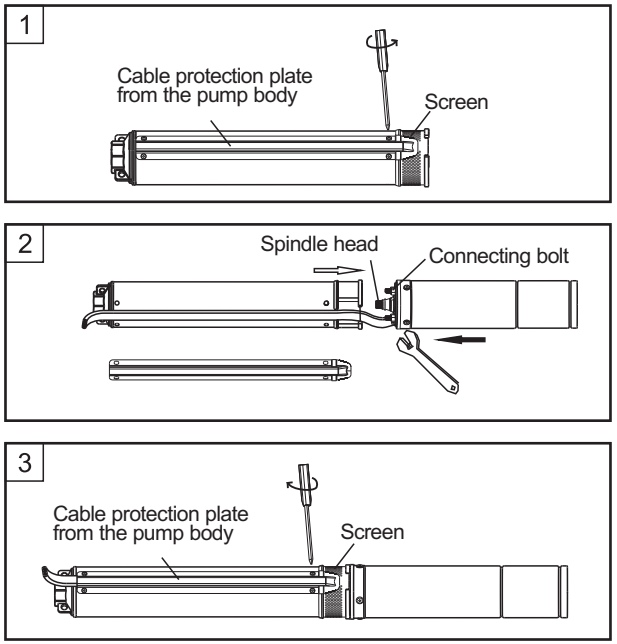

3.5 Before use, thoroughly test the insulation resistance of the electronic pump's stator winding (including outgoing cable) to the pump casing with a 500V megohmmeter, and the cold insulation resistance should be not less than 100 MΩ.

3.6 The electric pump shall be connected to the power source for trial operation before entering into water. The time shall not exceed 3 seconds.The cable lines of single-phase water pump shall be connected according to the wiring diagram on the electric machine or control cabinet strictly with correct colors. The wrong wiring will cause abnormal works or even damage the electric machine; three-phase water pump can be connected without differentiating cable colors.

3.7 A power line can be added with rather distant power supply.Please select proper cable lines according to table 1 to avoid too thin cable that will lead to abnormal operation.

220-240V 50/60Hz

Single Phase Motor	Cable Length / Cross-sectional Area Of Conductor (mm^2)					
kW	0-15m	16-30m	31-45m	46-60m	61-75m	76-90m
0.25	0.75	0.75	0.75	0.75	1.0	1.25
0.37	0.75	0.75	0.75	1.0	1.25	1.25
0.55	0.75	0.75	1.0	1.25	1.25	1.5
0.75	0.75	1.0	1.25	1.25	1.5	1.5
0.92	1.0	1.25	1.25	1.5	1.5	2.0
1.1	1.0	1.25	1.5	1.5	2.0	2.0
1.5	1.25	1.5	2.0	2.0	2.5	2.5
1.8	1.5	2.0	2.0	2.5	2.5	3.0
2.2	1.5	2.0	2.5	2.5	3.0	4.0
2.6	2.0	2.5	2.5	3.0	4.0	4.0
3.0	2.0	2.5	3.0	4.0	4.0	5.0

380-415V 50/60Hz

Three Phase Motor	Cable Length / Cross-sectional Area Of Conductor (mm^2)					
kW	0-20m	21-40m	41-60m	61-80m	81-100m	101-120m
0.37	0.75	0.75	0.75	1.0	1.0	1.25
0.55	0.75	0.75	1.0	1.0	1.25	1.25
0.75	0.75	1.0	1.0	1.25	1.25	1.5
1.1	0.75	1.0	1.25	1.25	1.5	1.5
1.5	1.0	1.25	1.25	1.5	1.5	2.0
2.2	1.25	1.5	1.5	2.0	2.0	2.5
2.6	1.25	1.5	2.0	2.0	2.5	2.5
3.0	1.5	2.0	2.0	2.5	2.5	3.0
4.0	2.0	2.5	2.5	3.0	3.0	4.0
5.0	2.0	2.5	3.0	3.0	4.0	4.0
5.5	2.5	3.0	3.0	4.0	4.0	5.0
7.0	2.5	3.0	4.0	4.0	5.0	5.0
7.5	3.0	4.0	4.0	5.0	5.0	6.0
9.2	3.0	4.0	5.0	5.0	6.0	6.0
11	4.0	5.0	5.0	6.0	6.0	6.0
13	4.0	5.0	6.0	6.0	6.0	8.0
15	5.0	6.0	6.0	6.0	8.0	8.0
18.5	5.0	6.0	6.0	8.0	8.0	10.0
22	6.0	6.0	8.0	8.0	10.0	10.0
26	6.0	8.0	8.0	10.0	10.0	6.0x2
30	8.0	8.0	10.0	10.0	6.0x2	8.0x2

To choose the required cutting area of cable according to the power of pump and length of external cable to ensure the normal operation of motor

3.8 Please operate as below instructions for adding cable lines:
3.8.1 Strip the cable by 50-60mm with a wire stripper,then strip the rubber hose to reveal a 20-30mm copper wire.

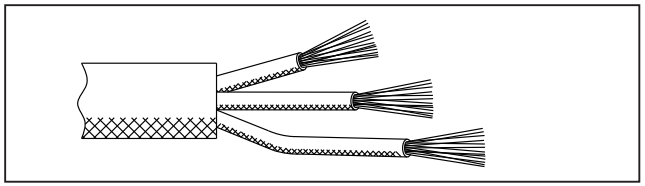

3.8.2 Tighten two cable lines with the same color into spiral shape so asto guarantee close connection.

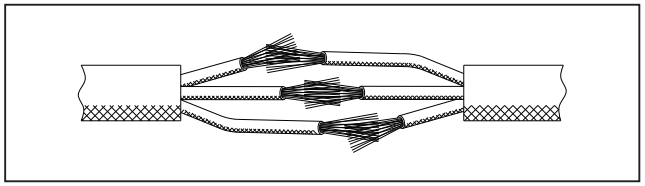

3.8.3 Tightly wind and cover the cable with the electrical insulating tape from the 15-20mm core cord.

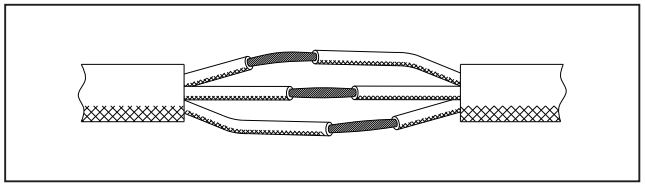

3.8.4 Wrap the cable that is covered withthe electrical insulating tape with a waterproof adhesive tape from the 20-30mm core cord. The waterproof adhesive tape should be 10mmlonger than the electrical insulating tape at both ends. Before the wrapping, the waterproof tape should be stretched out 1-fold its length and follow the normal use.

